ENG

Manuale d'uso e manutenzione
Betriebs- und Bedienungshandbuch
Manuel d'utilisation et d'entretien
Instructie- en onderhoudshandleiding
Instruction and maintenance manual
Manual de uso y mantenimiento
Manual de uso e manutenção
Bruks- och underhållsanvisning
Руководство по эксплуатации и обслуживанию
Instrukcja użytkowania i konserwacji
ΟΔΗΓΙΕΣ ΧΡΗΣΗΣ ΚΑΙ ΣΥΝΤΗΡΗΣΗΣ

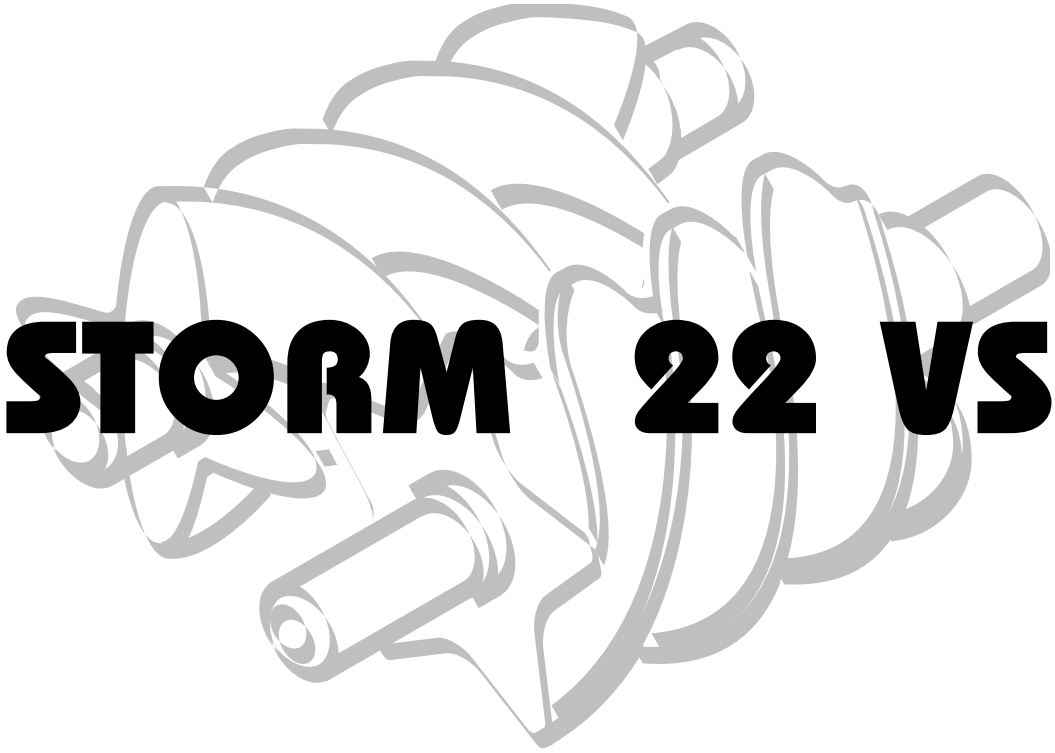

STORM 22 VS

TRANSLATION OF THE ORIGINAL INSTRUCTIONS

CE

DECLARATION OF CONFORMITY

The following declaration is attached to the compressor in original copy.
All identification data: manufacturer, model, code and serial number are stamped on EC label.
For any request for copies it is ESSENTIAL to provide ALL the data stamped on EC label.

IT- Dichiara sotto la sua esclusiva responsabilità, che il compressore d'aria qui di seguito descritto è conforme alle prescrizioni di sicurezza delle direttive: 2006/42/CE, 2006/95/CE, 2004/108/CE, 2009/105/CE, EN 1012-1, EN 60204-1, EN 61000-6-3/4.	**SI** - Na lastno odgovornost izjavlja, da je spodaj opisani zračni kompresor v skladu z varnostnimi predpisi, ki veljajo za stroje 2006/42/EU, 2006/95/EU, 2004/108/EU , 2009/105/EU, EN 1012-1, EN 60204-1, EN 61000-6-3/4.
GB - Declares under its sole responsibility that the air compressor described below complies with the safety requirements of directives: 2006/42/EC, 2006/95/EC, 2004/108/EC, 2009/105/EC, EN 1012-1, EN 60204-1, EN 61000-6-3/4	**HU** Kizárólagos felelőssége tudatában kijelenti, hogy a lent megnevezett légsűrítő megfelel a 2006/42/EK, 2006/95/EK, 2004/108/EK, 2009/105/EK, EN 1012-1, EN 60204-1 és EN 61000-6-3/4 irányelvek rendelkezéseinek
FR - Déclare sous son entière responsabilité que le compresseur d'air décrit ci-après est conforme aux prescriptions de sécurité des directives : 2006/42/CE, 2006/95/CE, 2004/108/CE, 2009/105/CEE, EN 1012-1, EN 60204-1, EN 61000-6-3/4..	**CZ** - prohlašuje s plnou odpovědností, že uvedený vzduchový kompresor vyhovuje bezpečnostním požadavkům směrnic : 2006/42/ES, 2006/95/ES, 2004/108/ES , 2009/105/ES, EN 1012-1, EN 60204-1, EN 61000-6-3/4.
DE - erklärt unter ihrer alleinigen Verantwortung, daß der in Folge beschriebene Luftkompressor den Sicherheitsvorschriften der Richtlinien: 2006/42/EG, 2006/95/EG, 2004/108/EG, 2009/105/EG, EN 1012-1, EN 60204-1, EN 61000-6-3/4..	**SK** - Zodpovedne vyhlásuje, že uvedený vzduchový kompresor zodpovedá bezpečnostným požiadavkám smerníc: 2006/42/ES, 2006/95/ES, 2004/108/ES, 2009/105/ES, EN 1012-1, EN 60204-1, EN 61000-6-3/4.
ES - Declara bajo su exclusiva responsabilidad que el compresor de aire descrito a continuación responde a las prescripciones de seguridad de las directivas : 2006/42/CE, 2006/95/CE, 2004/108/CE, 2009/105/CEE,EN 1012-1, EN 60204-1, EN 61000-6-3/4	**RU -** Заявляет под свою полную ответственность, что нижеописанный воздушный компрессор соответствует требованиям безопасности согласно директивам 2006/42/EC, 2006/95/EC, 2004/108/EC, 2009/105/EC, EN 1012-1,EN 60204-1, EN 61000-6-3/4
PT - Declara sob a sua exclusiva responsabilidade que o compressor de ar descrito a seguir está em conformidade com as prescrições de segurança das directivas: 2006/42/CE, 2006/95/CE, 2004/108/CE, 2009/105/CEE, EN 1012-1, EN 60204-1, EN 61000-6-3/4	**NO -** Erklærer under eget ansvar at luftkompressoren her beskrevet er i overensstemmelse med sikkerhetsforskriftene i direktivene: 2006/42/EC, 2006/95/EC, 2004/108/EC, 2009/105/EC, EN 1012-1, EN 60204-1, EN 61000-6-3/4..
NL - Verklaart onder zijn eigen verantwoordelijkheid dat de hieronder beschreven luchtcompressor in overeenstemming is met de veiligheidsvoorschriften van de richtlijnen: 2006/42/EG, 2006/95/EG, 2004/108/EG, 2009/105/EG(ex 87/404/EEG), EN 1012-1, EN 60204-1, EN 61000-6-3/4	**TR -** Tek sorumluluk kendisinde olmak üzere, aşağıda anlatılan hava kompresörünün şu direktifl erin güvenlik gereklerine uygun olduğunu beyan eder/ederiz: 2006/42/EC, 2006/95/EC, 2004/108/EC, 2009/105/EC, EN 1012-1, EN 60204-1, EN 61000-6-3/4
DK - Forsikrer på eget ansvar, at luftkompressoren, der beskrives nedenfor, er i overensstemmelse med sikkerhedsforskrifterne i direktiverne: 2006/42/EC, 2006/95/EC, 2004/108/EC, 2009/105/EC, EN 1012-1, EN 60204-1, EN 61000-6-3/4..	**RO -** Declara pe propria raspundere ca,compresorul de aer denumit in continuare,este in conformitate cu cerintele de securitate cuprinse in directivele: 2006/42/CE, 2006/95/CE, 2004/108/CE , 2009/105/CE, EN 1012-1, EN 60204-1, EN 61000-6-3/4
SE - Försäkrar under eget ansvar att den luftkompressor som beskrivs följande är i överensstämmelse med säkerhetsföreskrifterna i EU-direktiv: 2006/42/EG, 2000/14/EG, 2006/95/EG, 2009/105/EG, EN 1012-1, EN 60204-1, EN 61000-6-3/4..	**BG -** Декларира на собствена отговор ност, че въздушният компресор описан по-долу е в съответствие с изискванията на директивата за безопасност: 2006/42/EC, 2006/95/EC, 2004/108/EC, 2009/105/EC, EN 1012-1, EN 60204-1, EN 61000-6-3/4
FI - vakuuttaa, että seuraavassa esitelty ilmakompressori vastaa alla lueteltujen direktiivien turvallisuusvaatimuksia: 2006/42/EC, 2006/95/EC, 2004/108/EC, 2009/105/EC, EN 1012-1, EN 60204-1, EN 61000-6-3/4..	**RS** - Izjavljuje pod punom odgovornošću da je dole opisan kompresor vazduha u skladu sa sigurnosnim zahtevima sledećih Direktiva: 2006/42/EZ, 2006/95/EZ, 2004/108/EZ, 2009/105/EZ, EN 1012-1, EN 60204-1, EN 61000-6-3/4
GR - Δηλώνει με αποκλειστική δική της ευθύνη, ότι ο συμπιεστής αέρος που περιγράφεται παρακάτω ανταποκρίνεται στις προδιαγραφές ασφαλείας των οδηγιών: □2006/42/EK, 2006/95/EK, 2004/108/EK, 2009/105/EK, EN 1012-1, EN 60204-1, EN 61000-6-3/4.	**LT** - Su visa atsakomybe pareiškia, kad žemiau aprašytas oro kompresorius atitinka saugumo direktyvų 2006/42/ES, 2006/95/ES, 2004/108/ES, 2009/105/ES, EN 1012-1, EN 60204-1, EN 61000-6-3/4
PL - Deklaruje pod pełną własną odpowiedzialność, że opisana niżej sprężarka powietrzna odpowiada wymaganiom bezpieczeństwa zawartym w Dyrektywach 2006/42/EC, 2006/95/EC, 2004/108/EC, 2009/105/EC, EN 1012-1, EN 60204-1, EN 61000-6-3/4	**EE** - Avaldab enda täieliku vastatusega, et edaspidi kirjeldatud õhukompressor vastav ohutuse nõudmistele direktiividele 2006/42/CE, 2006/95/CE, 2004/108/CE, 2009/105/CE, EN 1012-1, EN 60204-1, EN 61000-6-3/4.
HR - Izjavljuje pod punom odgovornošću da je dolje opisan kompresor zraka u skladu sa sigurnosnim zahtjevima sljedećih direktiva 2006/42/EC, 2006/95/EC, 2004/108/EC, 2009/105/EC, EN 1012-1, EN 60204-1, EN 61000-6-3/4	**LV** - Apliecinā zem savas pilnīgas atbildības, ka apakšā aprakstītais gaisa kompresors atbilst direktīvu, 2006/42/EC, 2006/95/EC, 2004/108/EC, 2009/105/EC, EN 1012-1, EN 60204-1, EN 61000-6-3/4..

INDEX

OUTFIT

The following accessories are supplied with the compressor:

- use and maintenance manual
- anti-vibration elements
- electric box panel key
- oil/condensate exhaust tube

Check that the above accessories are available. Once the goods have been delivered and accepted, no complaints are accepted.

CONDITION OF THE MACHINE WHEN SUPPLIED

Every compressor is shop tested and delivered ready to be installed and to be set at work.
Oil used is: ROTENERGY PLUS.

OVERALL DIMENSIONS

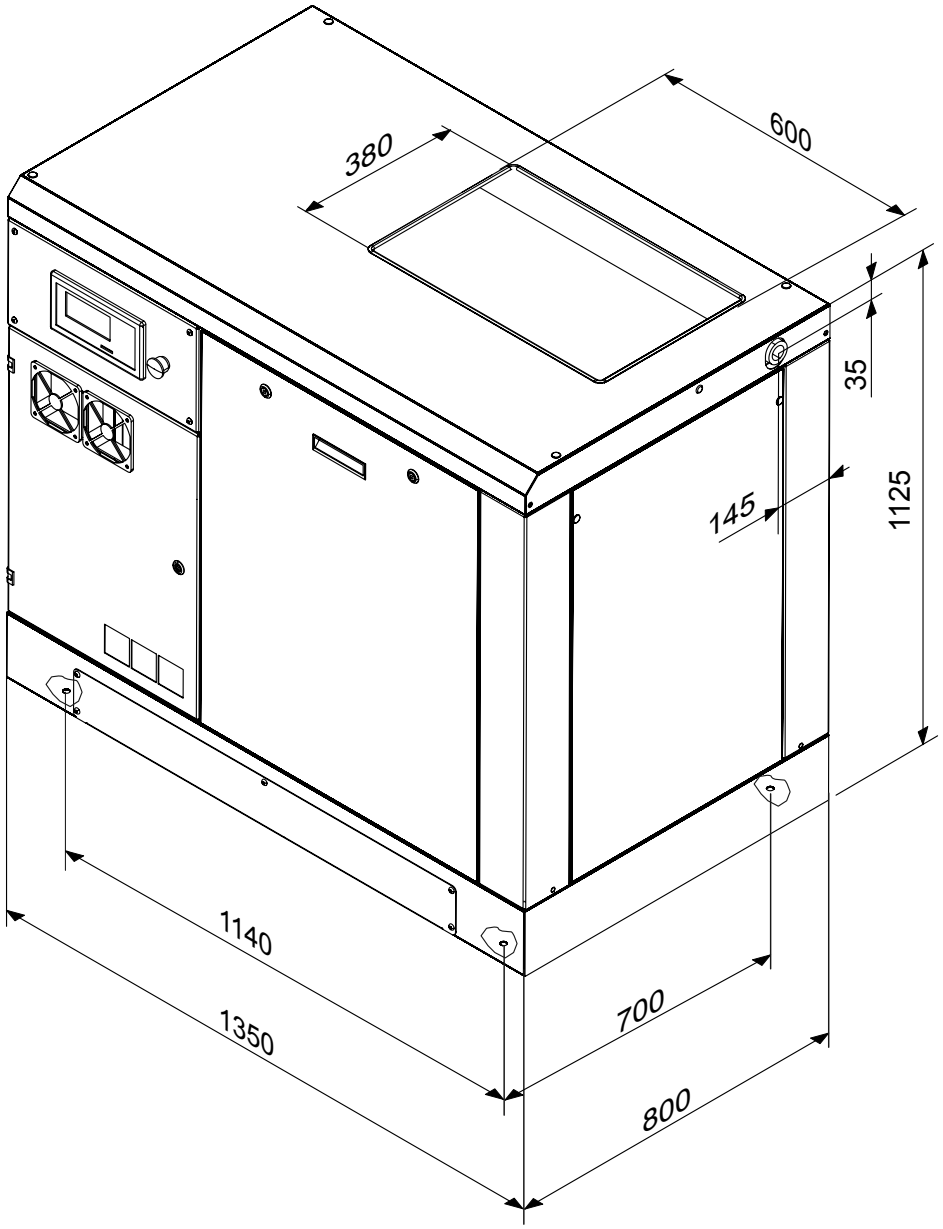

OVERALL DIMENSIONS

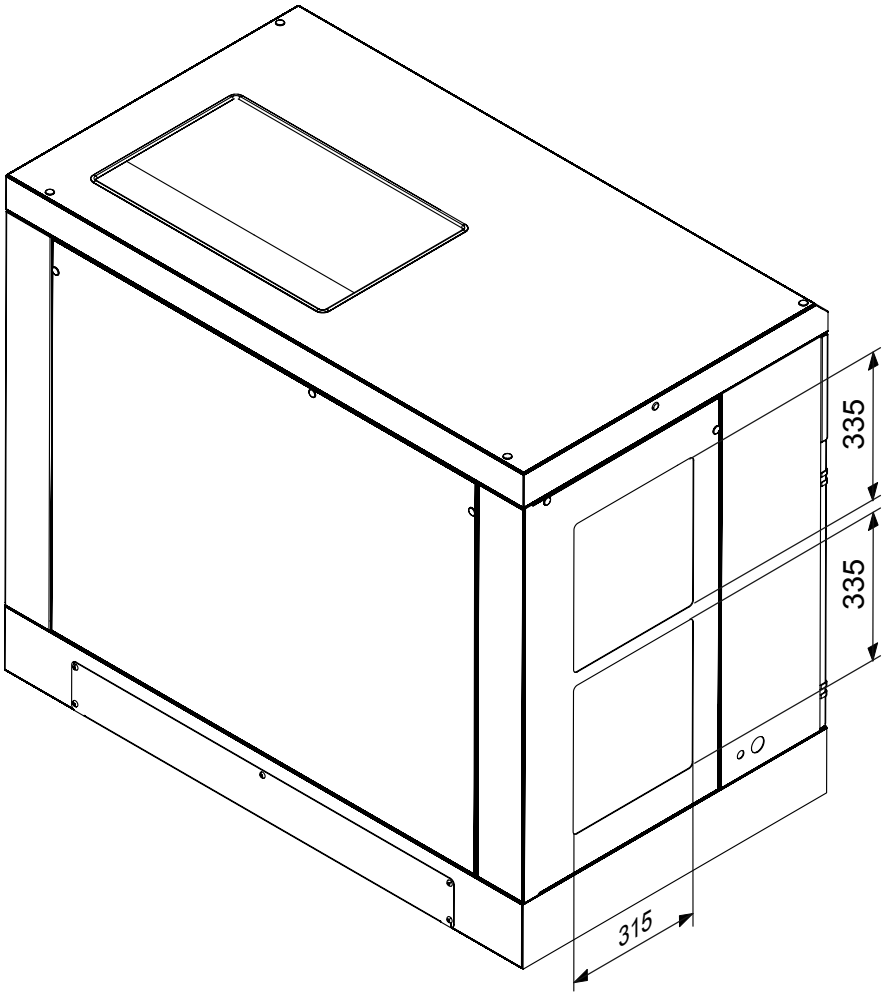

SAFETY REGULATIONS

GENERAL WARNINGS

- The rotating compressors are destined for arduous and continuous industrial use. They are particularly adapt for application in industries where a large consumption of air is requested for long periods of time.
- The compressor must be used exclusively as indicated in this manual, which must be kept carefully in an easily accessible place known to everyone, as it must remain with the machine for its entire duration.
- The company in which the compressor is to be installed must appoint a person in charge of the compressor itself. Controls, adjustments and maintenance interventions are under his responsibility: if this person must be replaced, the substitute must read the user and maintenance manual and any notes made regarding technical and maintenance interventions carried out up to this time.

SYMBOLS USED IN THE MANUAL

Several symbols have been used inside the manual, which highlight dangerous situations, give practical advice or simple information. These symbols are found at the side of a text, at the side of a figure or at the top of a page (in this case they refer to all subjects considered on the entire page).
Pay attention to the meaning of the symbols.

ATTENTION!
Highlights an important description regarding: technical interventions, dangerous conditions, safety warnings, advice and/or very important information.

MACHINE AT A STANDSTILL!
Every operation highlighted by this symbol must only be carried out with the machine at a standstill.

REMOVE VOLTAGE!
It is compulsory to deactivate the electric power supply to the machine before carrying out any interventions on the machine.

SPECIALISED STAFF!
All interventions highlighted with this symbol must be carried out exclusively by a specialised technician.

SYMBOLS USED ON THE COMPRESSOR

Several different labels are applied to the compressor. Their function is most of all to highlight any hidden dangers and to indicate correct behaviour during use of the machine or in particular situations.

It is of fundamental importance that they are respected.

Warning symbols

High temperature risk

Electric shock risk

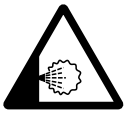

Risk from hot or dangerous gases in the work area

Pressurised container

Moving mechanical parts

Maintenance in progress

Machine with automatic start-up

Prohibition symbols

Do not open hatches when the machine is functioning

If necessary, always use the emergency stop button and not the line isolating switch

Do not use water to put out fires on electrica appliances

Obligation symbols

Carefully read the user instructions

read this page carefully before carrying out any intervention on the compressor

SAFETY REGULATIONS

TO DO:

Make sure that mains voltage corresponds to the voltage indicated on CE plate and that cable of suitable cross-section are used for electric connections.
Always check oil level before starting the compressor.
Be familiar with emergency stop control and all other controls.
Unplug the connector before any maintenance work, so to avoid accidental start.
Ensure that all parts have been correctly reassembled after any maintenance work.
Keep children and animals off the working area to avoid injuries caused by devices connected to the compressor.
Ensure that temperature of the working environment ranges between +2 and + 45 ºC. Compressor working temperature shall range between 70÷85°C (20-25°C room temperature). Lower temperatures may causes condensate accumulation inside the oil separator tank (inside the compressor). **Check for condensate and if necessary, drain it (see maintenance).**
The compressor should be installed and operated in a non-explosive environment.
Allow at least 80 cm between the compressor and the wall so to allow free air flow to the fan.
Press the emergency button on the control panel only in case of actual need so as to avoid possible damages to people or the very compressor.
When calling for technical assistance and/or advice, always mention model, code and serial number indicated on CE plate.
Always follow the maintenance schedule specified in the user's guide.

DO NOT:

Do not touch inner parts and pipes as they are very hot during compressor operation and stay hot for a certain time after compressor stops.
Do not position inflammable close to and onto the compressor.
Do not move the compressor when the tank is under pressure.
Do not operate the compressor if the power cable is damaged or defective or if connection is unstable.
Do not operate the compressor in wet or dusty environments.
Never aim the air jet at people or animals.
Do not allow unauthorized people to operate the compressor and give them all required instructions.
Do not hit fans with blunt objects as they might break during compressor operation.
Never operate the compressor without air filter.
Do not tamper with safety and adjusting devices.
Never operate the compressor when doors/panels are open or removed.
Do not strike the fans with contusive or metal objects as they could cause sudden breakage during functioning.
Do not allow the compressor to function without the filter and/or air pre-filter.
Do not tamper with safety and adjustment devices.
Never allow the compressor to function with the hatches/panels open or removed.

PRODUCT IDENTIFICATION

The compressor Your have purchased has its own CE plate showing the following data:

1) Manufacturer's data
2) CE mark – year of manufacture
3) TYPE = name of the compressor
   CODE = compressor code
   SERIAL NO. = serial number of the compressor You have purchased (to be always mentioned when calling for technical assistance)
4) max. operating pressure (bar and PSI) – compressor noise level in dB(A)
5) electric data: voltage (V/ph), frequency (Hz), absorption (A) - power (HP and kW), rotations per minute (Rpm).
6) other approvals

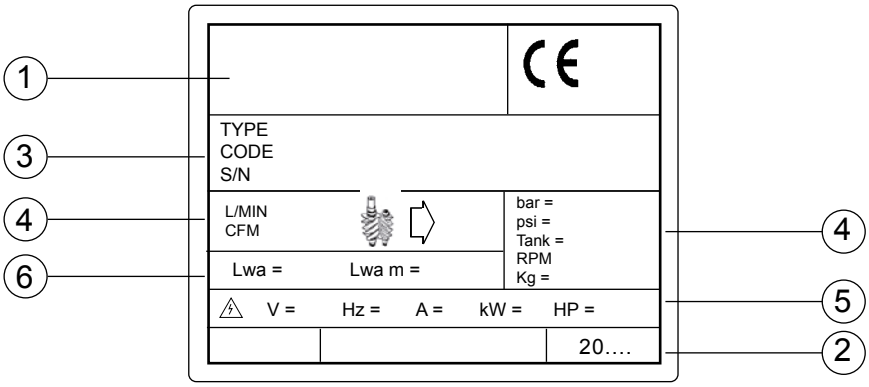

read this page carefully before carrying out any intervention on the compressor

INSTALLATION

DESCRIPTION OF THE COMPRESSOR

1

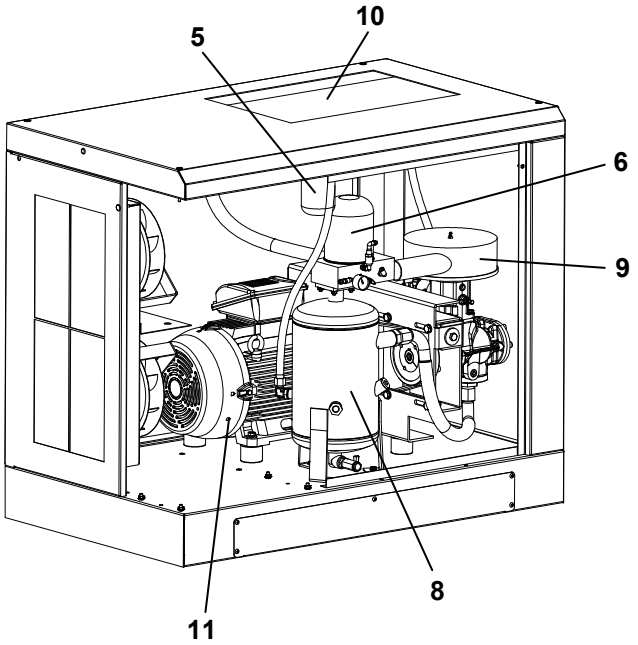

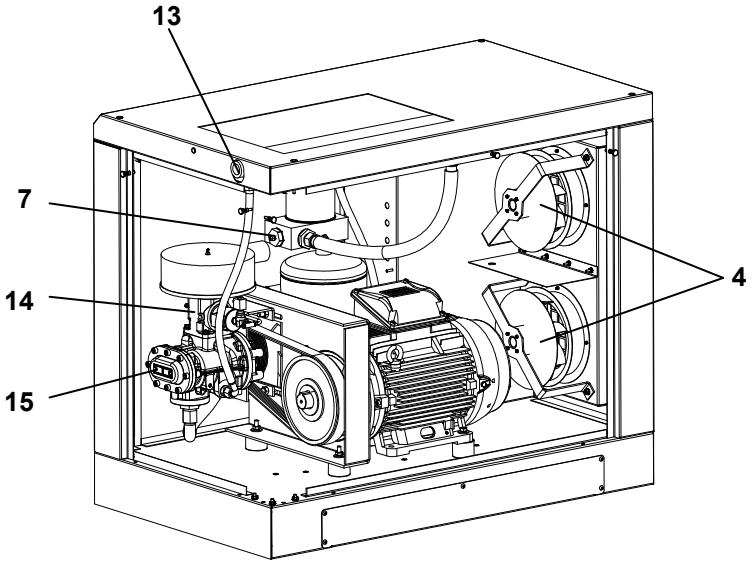

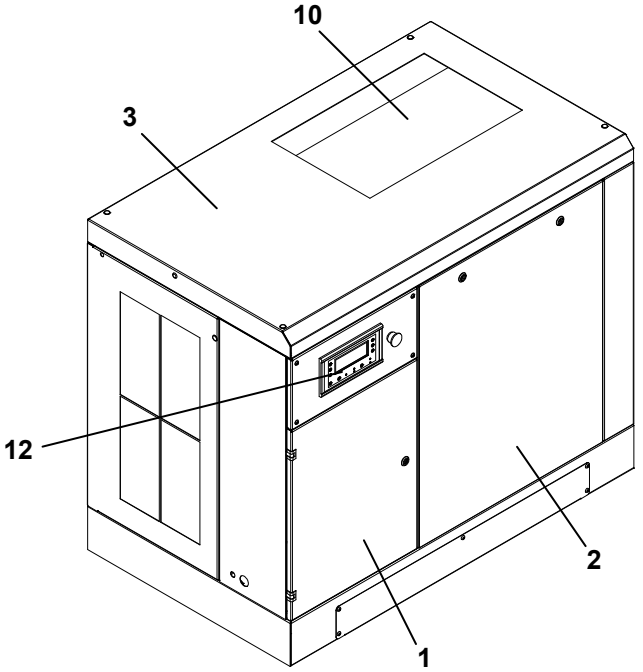

DESCRIPTION OF THE COMPRESSOR

1) Electrical equipment
2) Front panel / Oil indicator level
3) Lid
4) Electric fan
5) Oil filter
6) Oil separator filter
7) Minimum pressure valve
8) Oil separator tank
9) Air filter
10) Air/Oil radiator
11) Electric motor
12) Control panel
13) Air intake outlet
14) Screw compressor

UNPACKING AND HANDLING THE MACHINE

When delivered, compressor top is protected by cardboard packing.
Wear suitable protective gloves and then cut outer straps and then remove cardboard from the top. Check the (outer) good condition of the machine before moving the compressor. Visually check that no parts are damaged. Also ensure that all accessories are available.
Lift the machine using a fork lift truck. Fit the anti-vibration elements into their proper seat and move the machine to the room chosen for its location with maximum care.
Keep all packing materials at least for the warranty period for possible moving. In case of need, it will be safer for delivery to the technical assistance dept.
Then, dispose of packing materials in compliance with current laws.

LOCATION (fig. 2)

The room chosen for the installation of the compressor should meet the following requirements and comply with what is specified in the current safety and accident prevention regulations:

- **low percentage** of fine dust,
- **proper room ventilation and size** that allow room temperature under 45° C. In the event of inadequate hot air discharge, fit the exhaust fans as high as possible.

Condensate should be collected either into a container or a tank, or a water/oil separator should be fitted.
CONDENSATE IS A POLLUTING MIXTURE! It must not be let into the sewage.
The dimensions of the spaces are indicative only but it is advisable to follow them as closely as possible.

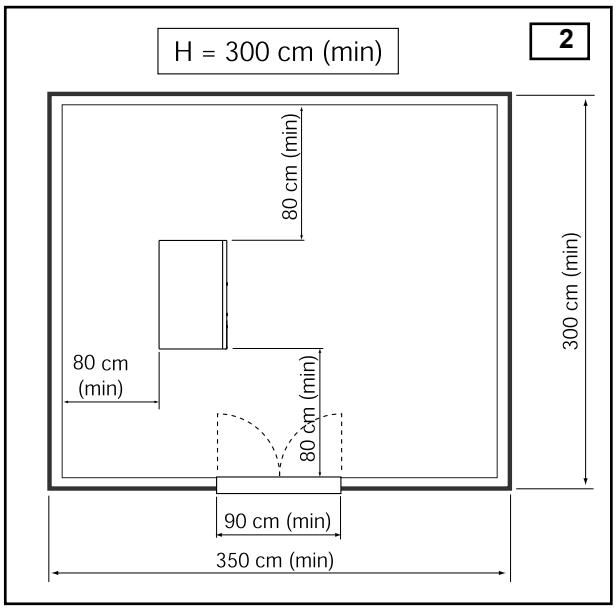

ELECTRICAL HOOK-UP (fig. 3)

- The mains cable should have a cross-section suitable for the machine power and should include no. 3 phase wires, no. 1 neutral cable and no. 1 earth wire.
- Between the mains cable and the compressor control panel a fused switch near the point where the cables go into the machine **is absolutely necessary**. The switch should be at least at 1.7 m from the ground.
- The switch (A) should be easily reached by the operator. The cables should be of the approved type and installed with the following grade of protection: minimum IP44.

N.B. To determine the cables cross-section and the type of switch refer to the data reported on the technical table. Sizing according to “VDE 0100, Part 430 and 523”, star-delta starter, 30° C ambient temperature and cable length lower than 50 meters.

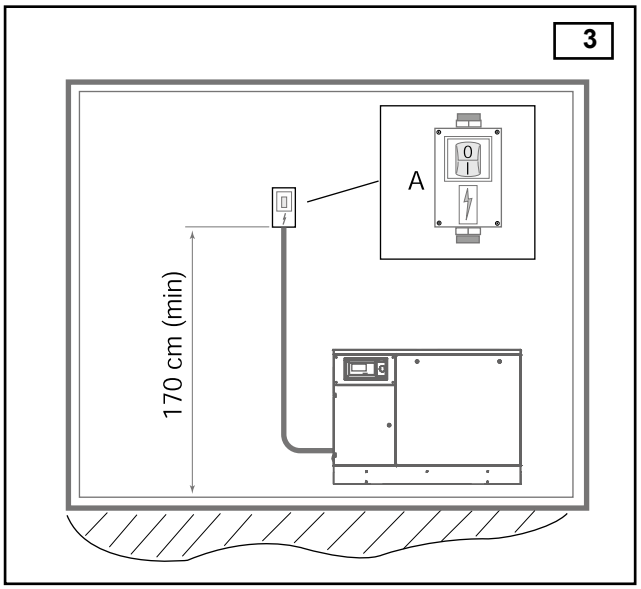

Electric connection	400 V		22 KW	
Conductor min. section	mm2		4G16	
Magnetic thermal switch	A		63	
Fuses	Agl		50	

TECHNICAL FEATURES

Technical characteristics	Type				22				
Working pressure	bar g			8	10				
Air-end	type				FS 50 TFC				
F.a.d. (according ISO 1217 annex C)max	l/min			3400	3050				
F.a.d. (according ISO 1217 annex C)min	l/min			1350	1300				
Oil quantity	l				7				
Quantity of top up oil	l				1,5				
Max final air temperature above ambient	°C				12				
Re-claimable heat	kJ/h				75240				
Fan flow rate	m3/h				3300				
Residual oil in the delivered air	mg/m3				2-4				
Electric motor	type				160 B3 B5				
Nominal power	kW				22				
Max. power absorbed, ventilation included	kW				24				
Electric box protection class	IP				22				
Maximum ambient temperature	°C				+2/+45				
Noise Level (Pneurop/Cagi PN2CPTC2)	dB(A)				68				
Electrical data									
Voltage	V/Ph/Hz				400/3 ~/50				
Auxiliary voltage	V/Ph/Hz				24/1~/50				
Max. Absorbed current, ventilation included	A				41				
Idle running absorbed power	kW				4				
Electrical motor protection class	IP				55				
Motor insulation class					F				
Service factor					1,1				
Protection devices									
Oil circuit max temperature	°C				110				
Pre-alarm oil temperature calibration	°C				105				
Thermal motor relay calibration	A				24				
Safety valve calibration	bar				14				
Dimensions									
Length	mm				1350				
Width	mm				800				
Height	mm				1130				
Weight	kg				365				
Air outlet	G				3/4”				

START-UP AND OPERATION

1 - CHECKS TO BE CARRIED OUT PRIOR TO START-UP

N.B.: The customer is responsible for installing the machine and making the required electrical and air connections.

Initial system start-up must be carried out by skilled personnel who will make the various checks required and follow the respective instructions.

Each machine was thoroughly tested at the plant before shipping.

You should monitor the compressor during the first hours of operations to check for faults.

- Follow the installation prescriptions given in the previous chapters.
- Remove all packaging materials and tools.
- Connect the compressor to the distribution line as shown in paragraphs.
- Check the oil level in the tank: refer to section “Maintenance, oil control and topping up.” In the event of low oil level, top up with rot-energy plus.
- Check for correspondence between the compressor plate data with the actual specifications of the electrical system. A variation of ± 5% with respect to the rated value is allowed.
- Connect the machine to the electrical system as described in the previous chapters.

Compliance with the correct voltage phase sequence is fundamental since this defines the direction of rotation of the motor. The direction of rotation must be that indicated by the adhesive label located to the side of the screw unit (see picture).
Note that even a few seconds of incorrect rotation may cause serious damage.
A phase sequence checking device to prevent mistakes is fitted in the electrical panel.

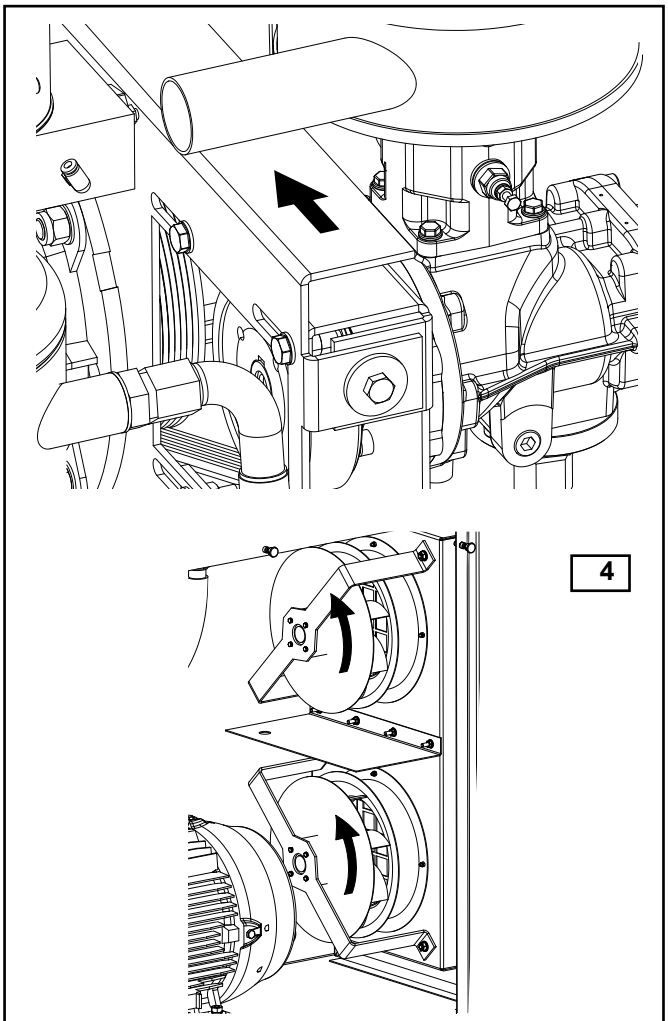

Before starting the machine read the following sections and the chapter on maintenance operations for in-depth knowledge of the machine.

WORKING CYCLE

- At the end of the starting cycle, the compressor reaches maximum operating speed and starts to compress air in the tank (4).
- at a value of - 0.5 bar operating pressure, the compressor begins to modulate the motor rotation frequency (max. 100%, min. 50%) in such a way as to maintain constant the selected pressure depending on the flow of air.
- The compressed air cannot outlet of the minimum pressure valve (5) which is adjusted at 4 bars.
- Compressed air compresses oil inside tank (4) and causes it to flow through tube (7) to the radiator (8).
- Subsequently, the oil passing through the oil filter (11) and through the pipe (9) reaches the compressor, mixing with the suction air and thereby creating an air/oil mixture which ensures sealing and lubrication of the moving organs of the compressor.
- The air/oil mixture goes back to tank (4), where air and oil are first separated by centrifugation and then by the oil separator filter (12).
- As a result, tank (4) will deliver air only to air radiator (8) through tube (3). Air is then conveyed to mains through a cut-off cock.
- Min. pressure valve (5) serves also as a check valve.
- Compressor delivers compressed air to outer air tank.
- reached the minimum value of motor rotation, starts a timer reached the preset value (120 sec.), off current to the solenoid of the regulator (2).

- Regulator (2) closes and compressor stops compressing and starts idling.
- Timer continues counting until reaching set value and, if pressure is unchanged, stops the electric motor. If pressure drops to minimum value set on controller, solenoid valve is powered and opens before timer counting is over.
- Regulator (2) opens and compressor operates under normal load; timer is reset.
- This cycle is automatically repeated.

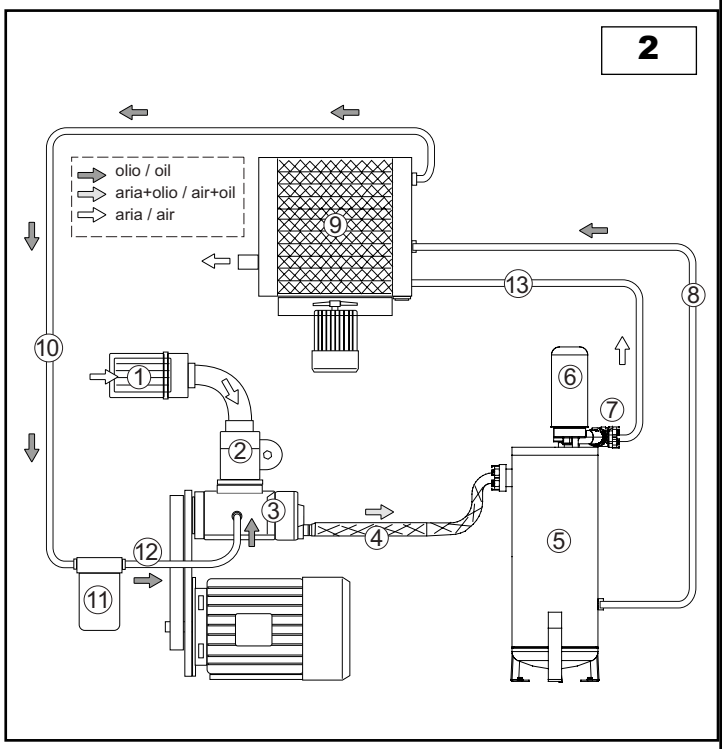

2 - “ET IV” CONTROL PANEL

The compressor is fitted with a “control panel” for setting up and monitoring machine operation. The operating parameters were entered by the Manufacturer during “testing”. The parameters were tested for several hours in the various operating conditions.

The features offered by this electronic control system includes:

- **Fully automatic compressor operation.**
- **Real-time operating parameter display.**
- **Customization operating parameter.**
- Programming of compressor operation on a daily or weekly basis.
- Programming and signalling of the Manufacturer’s maintenance schedule.
- Machine self-protection system to signal fault pre-alarms and automatically stop the machine in the event of serious problems.
- Remote machine control.
- Possibility of connecting the compressor via CAN-BUS interface (optional) to other similar compressors for integrated management of the set of machines.
- Remote compressor monitoring via personal computer and dedicated software (optional).

COMMAND AND PROGRAMMING KEYPAD

1 Scroll menu \ change values keys

2 Enter key – ENTER to confirm settings

3 Esc key – ESC to return to the previous menu

4 Reset – RESET to silence the alarms

5 0 / Off key – shut-down - STOP

6 I / On key – start-up - START

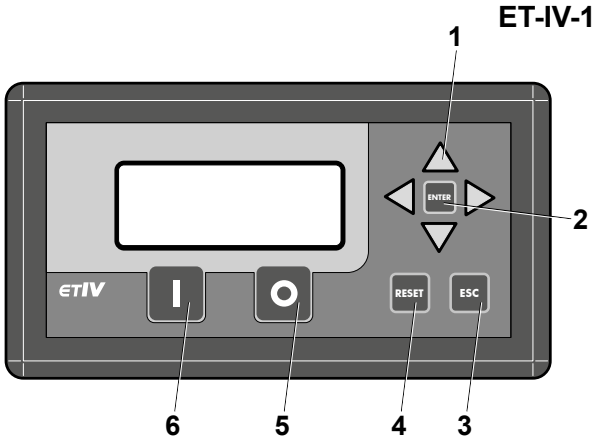

Compressor Functioning

Start-up procedure:

Press the **START (I)** button. If no alarms are on, the start-up cycle activates:

Stand-by for start-up: the control unit is waiting to verify the following conditions before starting the compressor:

-If the machine was switched off or a previous stoppage was executed, the control unit waits 15 seconds before starting the compressor.

-The control unit waits for the pressure to go below the value set in the “Load pressure” set before starting the compressor. (**“STAND -BY”** is displayed)

- Star compressor start-up: the line and star remote control switch for the time defined in the parameter “Star/delta time” (**“NO LOAD ”** is displayed)

-Transition from star to delta: the remote control switch for the line remains active, while the star relay is deactivated; this phase lasts for the set time of 20 msec. (**“NO LOAD ”** is displayed)

-Fully operational compressor start-up: the line relay is maintained active and also the delta relay is activated; this phase lasts for the time set in the parameter “Load delay”. (**“NO LOAD** ” is displayed)

-Compressor loading phase: the solenoid valve relay of the load is active. This phase lasts until the pressure measured reaches the pressure set in the parameter "No load pressure". (**"LOADED"** is displayed)

-Compressor no load phase: the solenoid valve relay of the load is deactivated; this phase lasts as long as set in the parameter “No load time”. After this, the cycle re-starts from the Start-up stand-by phase (**“NO LOAD** ” is displayed)

Stoppage procedure:

- Press the **STOP button (O)** to activate the stoppage procedure. The load solenoid valve is deactivated and the no load cycle starts for the time set in the parameter "Stoppage time" (**"NO LOAD "** and then "**STATUS - OFF"** are displayed)

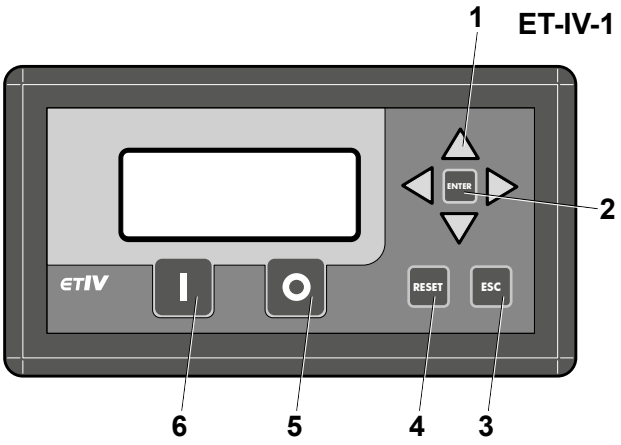

Remote pressure

- By enabling remote pressure control using the parameter **"Enable remote"**, the remote pressure digital input is is enabled. The control unit in this configuration keeps the remote input under control like an external pressure switch. Furthermore, it is also controlled that this acts within the range of the values set (load set, no load set or working and delta pressure in the event of an inverter). If the set pressure is surpassed due to an anomaly on the remote pressure control, the control unit will take command of the compressor cycle by working with the internal set values, signalling a **"Remote press. err."**.

If the anomaly is solved, pressure control is again entrusted to the remote pressure input, (at this point the alarm can be reset).

ON/OFF remote

Using the **"ON/OFF from remote"** the compressor can be activated remotely, by pressing the **Start (I) key.** Provided no alarms are on, remote start-up takes place. The remote command has less priority over the **Start (I)** and **Stop (O)** keys on the panel.

Compressor Functioning with an Inverter

Start-up procedure:

Press the **START (I)** button. If no alarms are on, the start-up cycle activates:

-Stand-by for start-up: the control unit is waiting to verify the following conditions before starting the compressor:

-If the machine was switched off or a previous stoppage was executed, the control unit waits 15 seconds before starting the compressor.

-The control unit waits for pressure to go under the value set in the "Working Pressure-Working Delta/2" set before starting the compressor. **("STAND-BY"** is displayed)

-Compressor start-up: the line remote control switch is powered

-Fully operational compressor start-up: the line relay is maintained active and also the delta relay is activated; this phase lasts for the time set in the parameter "Load delay". ("NO LOAD " is displayed)

-Compressor loading phase: the solenoid valve relay of the load is active. This phase lasts until the pressure measured reaches that set in the parameter "Working Press. + Working Delta/2".

("LOADED " is displayed)

-Compressor no load phase: the solenoid valve relay of the load is deactivated; this phase lasts as long as set in the parameter "No load time". After this, the cycle re-starts from the Start-up stand-by phase

(**"NO LOAD "** is displayed)

In this phase, the control unit executes a control algorithm to keep the pressure as close as possible to the working pressure by adapting the speed of the motor based on air consumption.

Dryer Functioning

For machines supplied with a dryer, the control unit can control the drying cycle.

Using the **"Dryer ON"** parameter, if its functioning is enabled, which can be continuous or linked to compressor motor functioning, by setting the parameter "Functioning mode"

The dryer motor is activated if the temperature is over the total of the temperatures defined in the parameters **"Temperature OFF" and "Thermic drift"** and deactivated if lower than the parameter **"Temperature OFF"**.

If the temperature remains outside the aforementioned limits for a time over that set in the parameter "Alarms delay", an alarm sounds (see ALARMS and WARNINGS paragraph)

To avoid damaging the motor due to over-frequent start-ups you can moderate re-starts for the time defined in the parameter "Minimum time". (see DRYER MENU paragraph)

Condensate Drainage Functioning

For machines requiring the condensate drainage function using the parameter **"Condensate drainage ON"**, the function can be enabled and defined by setting the parameter **"Functioning mode"**

The drainage solenoid valve stays on for the time set in the "Interval" parameter and remains deactivated for the time defined in the parameter "Opening time" (**see the CONDENSATE DRAINAGE MENU paragraph).**

START-UP AND OPERATION

Main Screen

The main screen summarises the current status of the machine

ET-IV-2

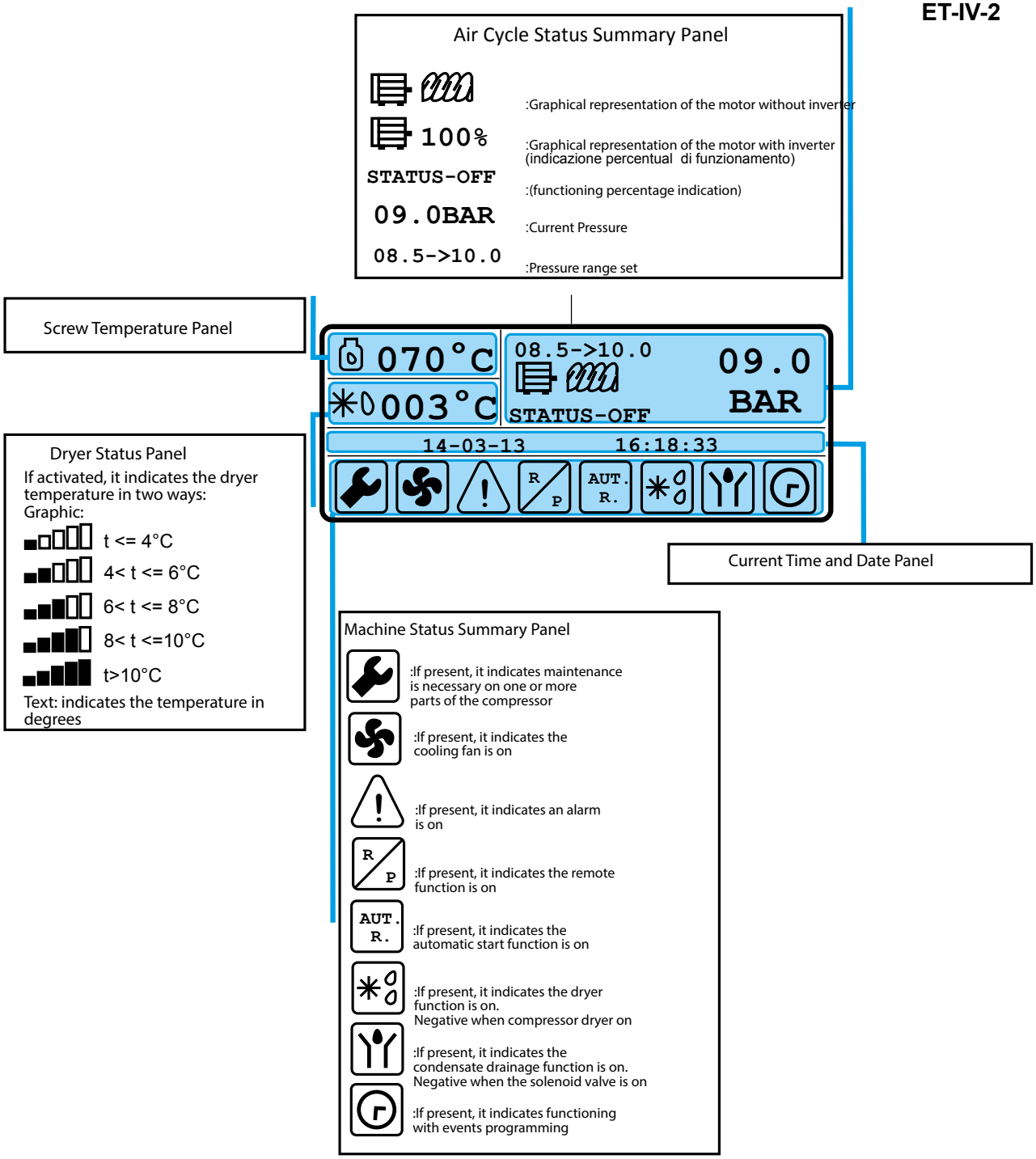

Current Air Cycle Status (1):

a) STAND-BY:	on status but motor off.
b) STATUS-OFF:	the motor is off and the load solenoid valve is disabled.
c) NO LOAD :	the motor is on but the load solenoid valve is disabled.
d) LOADED:	the motor is on and the load solenoid valve is enabled.
e) REMOTE-OFF:	Remote program enabled in stand-by for the start-up remote command.
f) TIME-OFF:	Start-up program enabled, in stand-by for start time.

Menus and Parameters

The menus are structured as vertical drop-down menus; the title is on top and is followed by the list of parameters or sub-menus available. If the menu contains more items than the LCD display can show, two arrows **(Up and Down)** appear on the right to indicate more items are present.
Use the **"Arrow up"** and **"Arrow down"** keys to find the parameter or sub-menu and highlight it to then open it by pressing the **"Enter"** key; go back by pressing the **"Esc"** key.
If you go to a parameter screen you can change its value using the **"Arrow up"** and **"Arrow down"** keys or you can make this value the default value using the **"Reset"** key. By pressing the **"Enter"** key, you exit the menu, saving the parameter value. Press the **"Esc"** key to return to the previous menu only.
Some menus contain exceptions in relation to parameter entries, which will be dealt with individually in the following paragraphs.

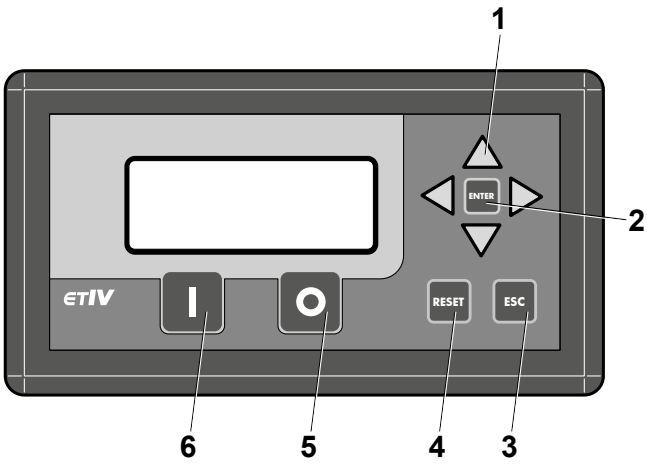

START-UP AND OPERATION

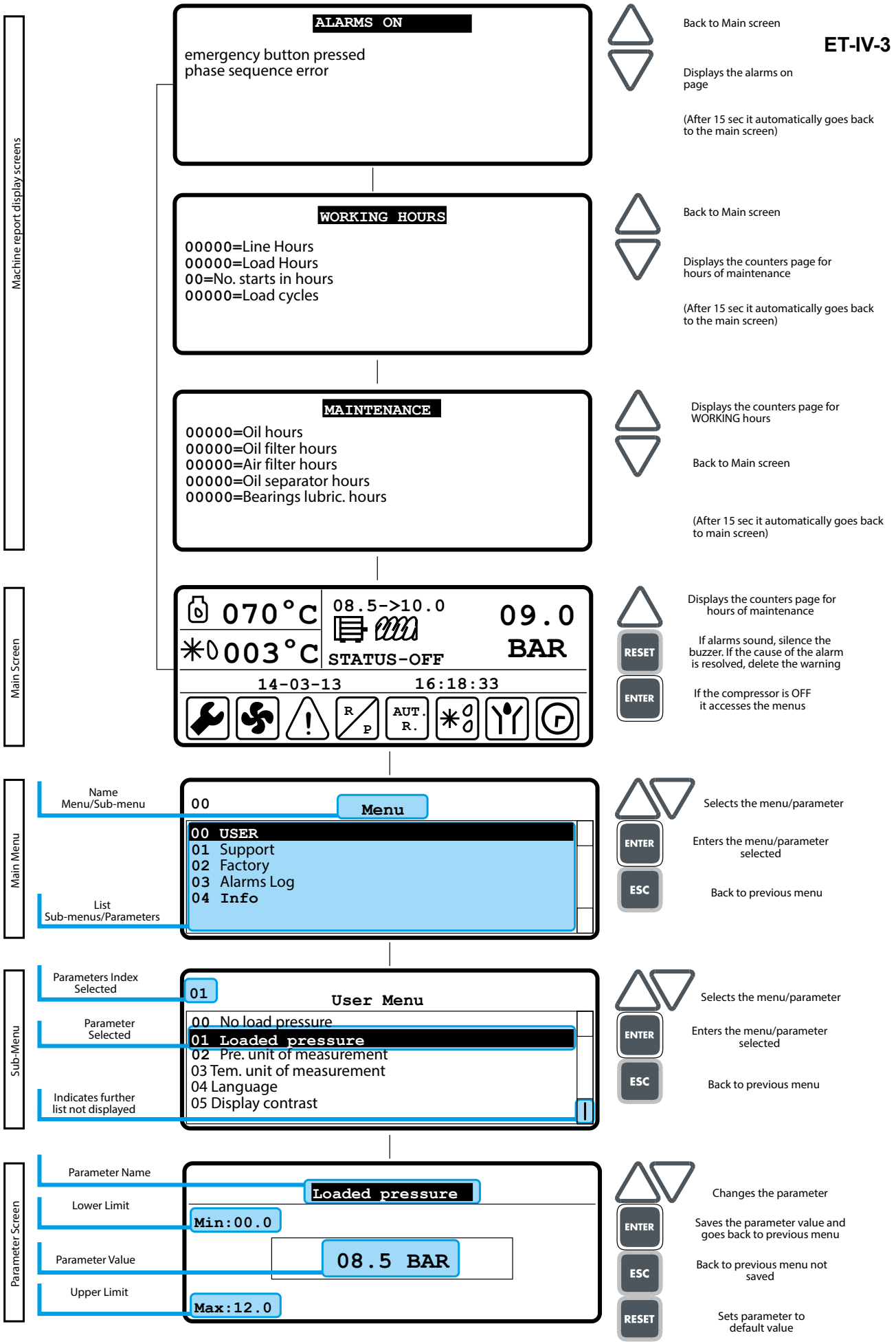

Password

Certain menus are password protected. A password is requested if you try to access the reserved areas.
Removal of menu protection persists until you go back to the main screen.

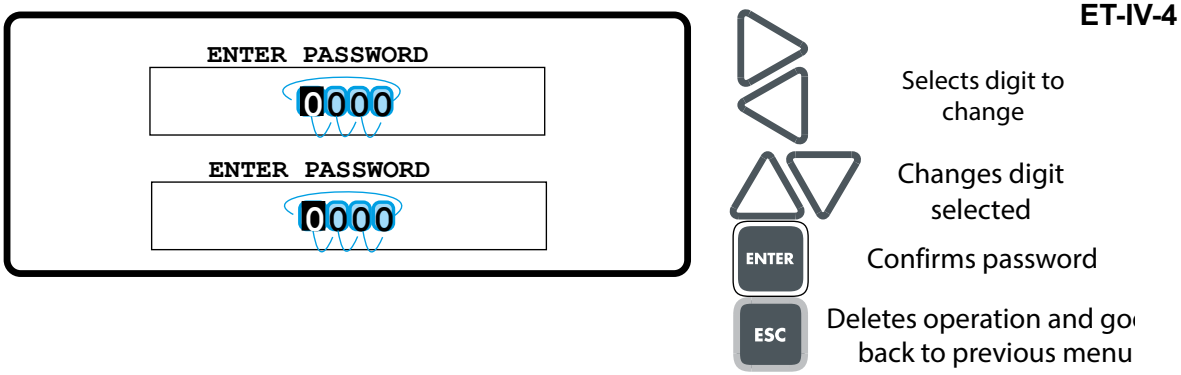

Main Menu

User: Menu containing the User parameters (see USER MENU paragraph).

Support: Menu containing the Support parameters (see SUPPORT MENU paragraph). Password protected.

Factory: Menu containing the Factory parameters (see FACTORY MENU paragraph). Password protected.

Alarms Log: List of last alarms.

Pressing **"ENTER"** on the highlighted alarm not only displays the type of alarm, but also the date, time, pressure and the oil temperature in the instance in which the alarm occurred.

Info: Displays information on the board and firmware.

User Menu

No load pressure: Defines the pressure at which the compressor must run with no load. The maximum value you can set is defined by the parameter "Maximum pressure" in the factory menu.

Loaded pressure: Defines the pressure necessary to restart the compressor. The recommended value is 1.5 bar lower than that defined in the "No load pressure" parameter.

Pre. unit of measurement: Defines the pressure unit of measurement.

Tem. unit of measurement: Defines the temperature unit of measurement.

Language: Defines the language used in the menus.

Display contrast: Defines the display contrast level.

Display lighting: Defines the display backlighting level.

Time/Date setting: Sets the date and time. Entry is guided and the procedure is only complete when all the settings are saved.

Start-up setting: Sub-menu where you can define 10 programs (0-9) per week for compressor start-up and stoppage. The parameters you can set are the start time, stoppage time, no load pressure, loaded pressure and the day of the week. (see page 19)

START-UP AND OPERATION

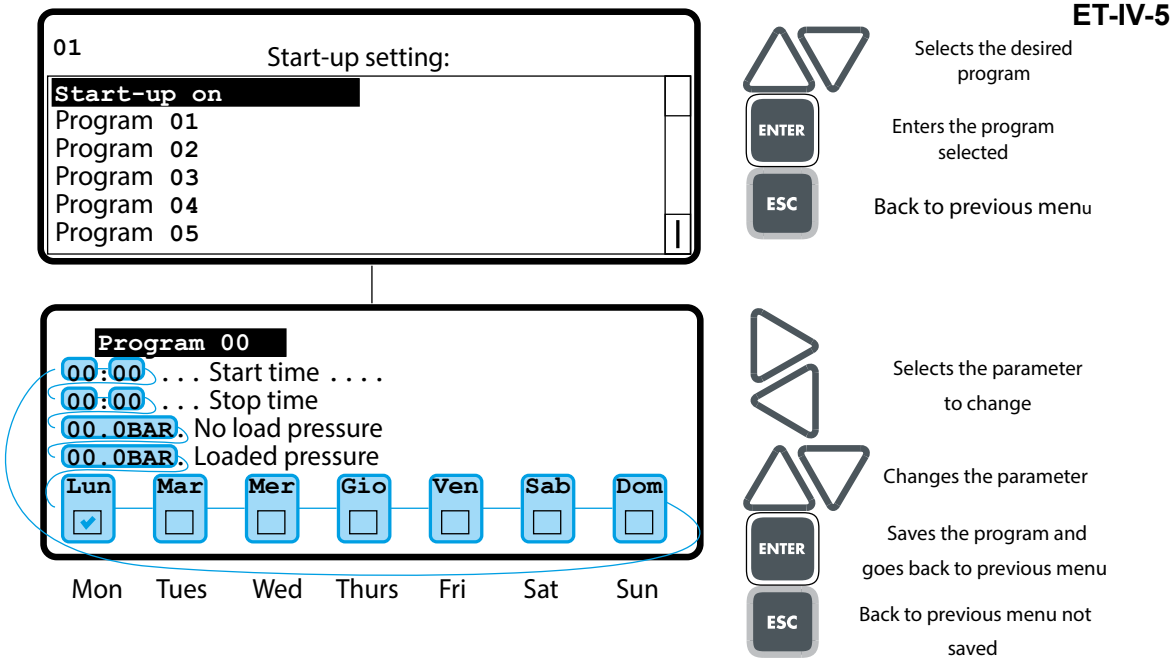

Support Menu

Oil hours: Indicates the hours remaining before the oil needs to be changed.

Oil filter hours: Indicates the hours remaining before the oil filter needs to be changed.

Air filter hours: Indicates the hours remaining before the air filter needs to be changed.

Oil separator hours: Indicates the hours remaining before the oil separator filter needs to be changed.

Bearings lubric. hours: Indicates the hours remaining before the main electric motor bearing needs to be lubricated.

Fan temperature: Defines the working temperature of the cooling fan. The threshold set has a hysteresis that can be changed by 10°C. e.g. if the operating temperature is set at 80°C, the fan will activate at 80°C and stop at 70°C (screw unit supply temperature).

No load time: Defines the motor stoppage time from the moment the load solenoid valve was deactivated because the desired pressure was reached.

Stoppage time: Defines the stoppage time of the compressor from the moment in which stoppage is requested using the STOP(O) key. The solenoid valve is immediately deactivated.

Automatic start: If the compressor is on, it starts automatically after an electricity cut. The first start should be activated by pressing the START (I) key on the panel.

Max start-up hours: Defines the maximum number of start-ups of the main electric motor within the arc of one hour. If surpassed, the compressor will stay on (loaded or with no load depending on the pressure) until the hour is up as calculated from first start-up and then returning to normal functioning.

Remote enabling: Remote command enabling.

Fan extra time: Defines the time in which the cooling fan stays on after the working temperature of the compressor has returned within the safety limits.

Inverter: Sub-menu for inverter configuration (see INVERTER MENU paragraph).

Fan temperature hysteresis: Defines the delta temperature in which the main cooling fan must work.

Diagnostic: Using the diagnostic menu, you can control the various inputs and outputs of the control unit:

Input: the status of 9 digital inputs can be controlled

Output: using the right and left keys, you can move on the relay output you want to command, while using the up and down buttons to activate the output

AN1: Indicates pressure in bar with centesimal precision
AN2: Indicates the temperature in °C Screw probe
AN3: Indicates the temperature in °C Dryer probe
INV: Indicates the inverter output automatically switches 4-20mA

Keeping the I key pressed, you can execute a motor start-up test. Pressing the 0 key, you can upload the default parameters (there are 32 sets of parameters present). The Factory password is required.

Press the **RESET** key to execute calibration of the pressure transducer (the Factory password is required)

Output configuration: Sub-menu that allows you to associate the outputs CN4-8 and CN4-9 with a function, choosing from: “Pre-alarm”, “Control ON”, “Compressor ON”, “Motor running” and “Compress No Load/Loaded”

ET-IV-6

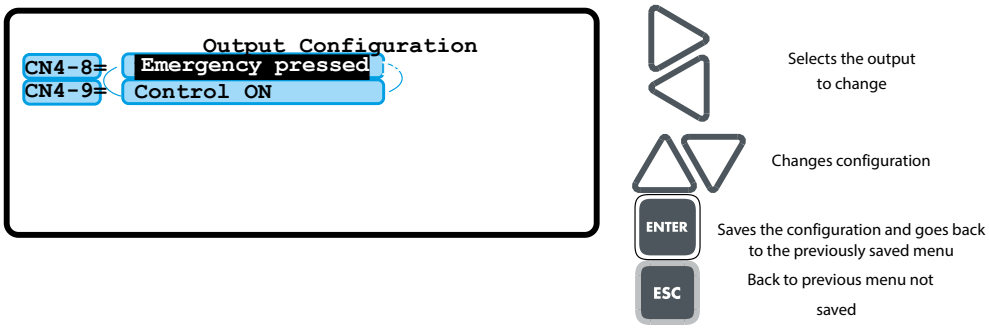

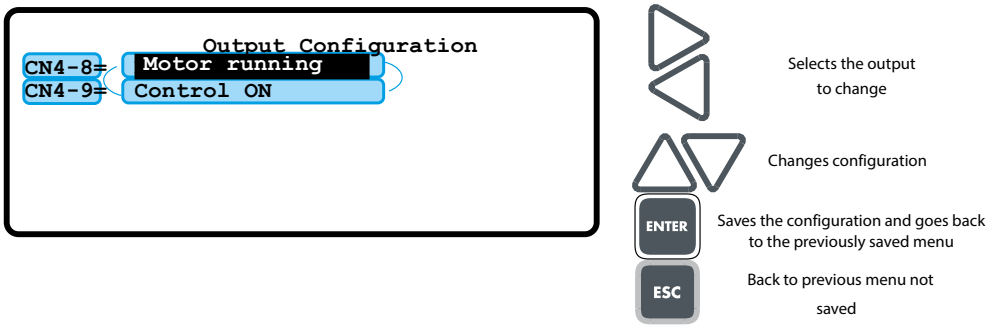

Comp. rotation man.: to define.

Dryer: Sub-menu for dryer configuration (see DRYER MENU paragraph).
Condensate drainage: Sub-menu for dryer configuration (see CONDENSATE DRAINAGE MENU paragraph).

Inverter Menu

Enable Inverter: Inverter enabling.

% Min functioning: **Defines the frequency minimum percentage at which the inverter must work. The maximum is 100%**

Inverter Integral: Defines the integral part on the PID calculation of the inverter percentage.

Inverter Proportional: Defines the proportional part on the PID calculation of the inverter percentage.

Inverter Differential: Defines the differential part on the PID calculation of the inverter percentage.

Pressure at 100%: the pressure at which the inverter can work up to 100%

Minimum pressure %: the pressure at which the inverter must work at the % Min functioning percentage set.

Dryer Menu

Dryer ON: Dryer Enabling.

Minimum time: Defines the minimum maintenance time of the deactivated dryer. It serves to protect the dryer compressor from over-frequent start-ups.

Temperature OFF: Defines the value of the temperature at which the dryer compressor is deactivated.

Temp. differential: Defines the positive differential between the OFF temperature and the re-activation temperature.

Temperature offset: Defines the difference between the temperature measured and the temperature displayed.

Functioning mode: Defines the functioning mode of the dryer:

Automatic: the compressor starts and stops based on the main motor of the compressor functioning.

Continuous: the dryer starts as soon as the compressor is switched on and will only stop when it is switched off.

Alarms Delay: Defines the delay with which the dryer alarms are displayed.

Alarm type: Defines the effects of the alarm on the compressor:

Alarm: blocks the compressor.

Warning: warning without blocking the compressor.

Extra run: Defines the time in which the dryer must continue to work, also after the compressor motor has stopped, if the functioning mode is set to automatic.

Condensate Drainage Menu

Condensate drainage on: Condensate drainage enabling.

Interval: Defines the time in which the condensate drainage solenoid valve remains closed.

Opening time: Defines the time in which the condensate drainage solenoid valve must stay open.

Functioning mode: Defines the functioning mode of condensate drainage:

Automatic: condensate drainage only takes place when the compressor is on and in loaded mode.

Continuous: condensate drainage is always on.

Factory Menu

Oil pre-alarm: Defines the advance time with which an oil temperature pre-alarm should sound compared to the maximum oil temperature.

Maximum temperature: Defines the surpassed maximum oil temperature value to generate an alarm and block the compressor.

Minimum temperature: Defines the minimum oil temperature. If the oil temperature detected is lower, an alarm sounds and the compressor is blocked.

Thermic drift: Defines the maximum variation per second of the oil temperature. If surpassed, an alarm sounds and the compressor is blocked.

Max. Press. Alarm: Defines the permitted pressure of the compressor. If surpassed, an alarm sounds and the compressor is blocked.

Maximum pressure: Defines the maximum pressure value which can be set in the parameter “No Load Pressure”.

Total Hours: Indicates the working hours of the main motor.

Loaded hours: Indicates the working hours the compressor is loaded.

AN3: Indicates the dryer probe temperature

INV: Indicates the inverter output automatically switches 4-20mA

Star/delta time: Defines the duration of the star phase during start-up of the main motor of the compressor.

Load delay: Defines the delay to enable the solenoid valve to command the calculated suction of the regulator from the moment in which the motor is considered fully operational.

Inverter: Sub-menu for inverter configuration (see INVERTER MENU paragraph).

Load insertion temperature: Defines the screw oil probe temperature threshold in which the loaded command solenoid valve of the suction regulator can work

Stand-by time: Defines the stand-by time in which the compressor cannot re-start after a stoppage or a re-start of the control unit.

Input configuration: Sub-menu allowing you to configure the logic of all the control unit inputs and associate a function of your choice to input CN2-1, among: “oil filter, “air filter” and “air pressure switch”. By setting the configuration equal to 1, the input logic will be denied. Vice versa, if left at 0 the logic will be normal.

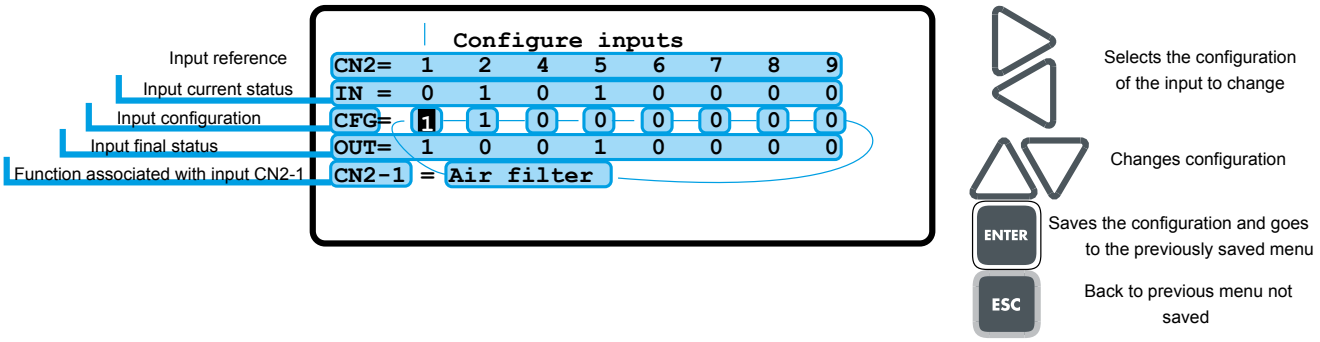

Alarms and Warnings

All the alarms that occur are visually displayed on the main screen in the “Alarms and Warnings Panel”, in the “Machine Status Summary Panel” (see Main Screen paragraph) and acoustically via the buzzer.

The acoustic alarm can be immediately silenced by pressing the “RESET” key, while the alarm indication on the LCD will only disappear if the cause of the alarm has been resolved.

The last 50 alarms are visible in the “Alarms log“ (see Main menu paragraph) where you can check their chronological order, the pressure and temperature in the instant in which they occurred.

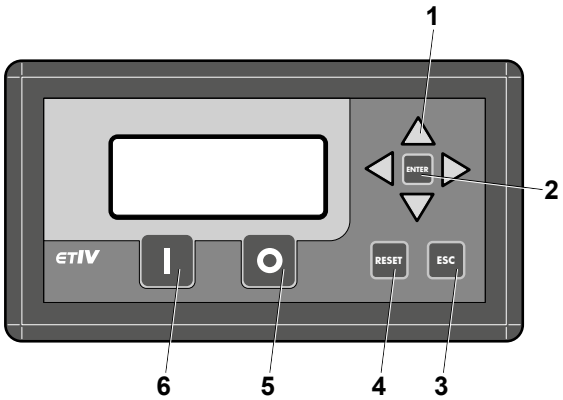

The possible alarms are as follows:

Alarm! Minimum temp.: Having reached the oil minimum temperature, the alarm BLOCKS the compressor. To re-start the compressor, you need to wait for the temperature to rise above the programmed value.

Alarm! Maximum temp.: Having reached the oil maximum temperature, the alarm BLOCKS the compressor. To re-start the compressor, you need to wait for the temperature to go below the programmed value.

Warning! Pre-alarm temp.: Having reached the oil pre-alarm temperature, the alarm DOES NOT BLOCK the compressor.

Alarm! Temp. sen. fault: When an anomaly occurs on the oil temperature sensor (sensor short-circuits or open), the alarm BLOCKS the compressor. To re-start the compressor, you need to replace the probe.

Alarm! Motor thermal switch: When the main motor thermal switch activates, the alarm BLOCKS the compressor. To re-start the compressor, wait for the motor to cool down.

Alarm! Fan thermal switch: When the fan thermal switch activates, the alarm BLOCKS the compressor. To re-start the compressor, wait for the fan to cool down.

Alarm! Max. press. alarm: aving reached the maximum permitted pressure, the alarm BLOCKS the compressor. To re-start the compressor, you have to bring pressure under the maximum pressure programmed.

Alarm! Press. sen. fault: When a pressure sensor anomaly occurs (sensor broken or disconnected), the alarm BLOCKS the compressor. To re-start the compressor, you need to reset the probe.

Alarm! Rotation direction err.: When a wrong sequence of the main motor phases occurs, the alarm BLOCKS the compressor. To re-start, you need to check the phases sequence is right.

Alarm! Emergency button pressed: Having pressed the emergency button, the alarm BLOCKS the compressor. To re-start, you need to reset the emergency button.

START-UP AND OPERATION

Alarm! Air filter: When an air filter anomaly occurs, the alarm BLOCKS the compressor.

Alarm! Oil separator filter: When an oil separator filter anomaly occurs, the alarm BLOCKS the compressor.

Alarm! Inverter fault: When an inverter anomaly occurs, the alarm BLOCKS the compressor. To re-start the compressor, you need to reset the inverter.

(NOTE: there is an alarm only if the inverter is enabled)

Warning! Remote press. alarm: When the remote command and the loaded/no load pressures set on the control unit are inconsistent, the alarm DOES NOT BLOCK the compressor. The compressor continues to work with the pressures programmed on the control unit. The alarm stops only when the remote command starts working correctly again.

(NOTE: there is an alarm only if remote is enabled)

Warning! High dew point: The dryer temperature remains over the total of the temperatures defined in the parameters “Temperature OFF” and “Temperature differential” for the time defined in the parameter “Alarms delay”.

(NOTE: there is an alarm only if the dryer is enabled)

Warning! Ice alarm: The dryer temperature remains under the temperature defined in the parameter “Temperature OFF” for the time defined in the parameter “Alarms delay”

(NOTE: there is an alarm only if the dryer is enabled)

Alarm! Dryer sen. fault: When an anomaly occurs on the dryer temperature sensor (sensor short-circuited or open), if the parameter “Alarm type” is set as the “alarm”(see Dryer menu paragraph), the alarm BLOCKS the compressor, otherwise the compressor continues to work. To re-start the compressor, you need to replace the probe.

(NOTE: there is an alarm only if the dryer is enabled).

Attention: Control unit connection diagram (see wiring/electronic diagrams section)

MAINTENANCE

- Correct maintenance is crucial to achieve maximum efficiency of your compressor, and to lengthen its operating life.
- It is also important to comply with the maintenance intervals recommended, but it must be remembered that such intervals are suggested by the manufacturer in the event that the environmental conditions of use of the compressor are optimal (see “Installation” chapter).
- The maintenance intervals can therefore be reduced depending on the environmental conditions in which the compressor operates.
- The oil used is RotEnergy Plus, the use of a different oil does not guarantee perfect efficiency and compliance with the maintenance intervals.
- The following pages describe the routine maintenance operations which can be performed by the person in charge of the compressor, the non-routine maintenance operations must instead be performed by an authorised technical assistance centre.

Maintenance table

Maintenance operation	MAINTENANCE INTERVAL		
	working hours	o	at least
ROUTINE MAINTENANCE			
Drain condensate	50		weekly
Clean cabinet pre-filter panel	50		weekly
Checking and topping up oil	500		once a month
Clean air intake filter cartridge	500		-
Check and clean radiator	1000		-
Replace intake air filter cartridge	2000		once a year
Replace oil filter	**4000***		**once a year**
Replace oil separator filter	**4000***		**once a year**
Replace oil	**4000***		**once a year**
NON-ROUTINE MAINTENANCE			
Clean/replace scavenge non return valve	4000		once a year
Intake valve service	4000		
Minimum pressure valve service	8000		
Solenoid valve replacement	12000		
Electric motor bearings replacement	12000		
Replace hoses	12000		
Replace elastic coupling	12000		
Air-end service	20000		

* When using mineral oil intervals are reduced to 1000 hours or 1 year

If the hourly limit is not reached, the maintenance operations **highlighted** in **bold** must be performed at least **once a year**.

To verify correct machine operation, perform the followng checks **after the first 100 hours of work**:

1) **Check the oil level**: top up with the same type of oil if necessary.
2) **Check for proper screw tightening**: in particular the power electric connection screws.
3) Visually check that all **fittings seal properly.**
4) Check the **belt tension** and if necessary, reset it.
5) Check the **hours of work** and the **type of service selected**
6) Check **room temperature**.

BEFORE MAINTAINING THE MACHINE ALWAYS PERFORM THE FOLLOWING:

√ **Press the machine automatic stop button** (do not use the emergency button).
√ Power the machine off by means of the wall outer switch.
√ Close the line cock.
√ Make sure that no compressed air is inside the oil separator tank.
√ Remove fairing and/ or panels.

MAINTENANCE

DRAIN CONDENSATE (Fig. 6)

The oil/air mixture cooling is set at a higher temperature with respect to the dew point of the air (under standard operating conditions of the compressor). However, the condensate in the oil cannot be fully removed.
Run the condensate drain; by unscrewing the cap A and B connecting to the tap at the base of the separation tank, the exhaust pipe supplied. Now open the tap B and close it as soon as oil starts coming out instead of water.
Check the oil level and top up if necessary.
CONDENSATE IS A POLLUTING MIXTURE! It must not be let into the sewage.

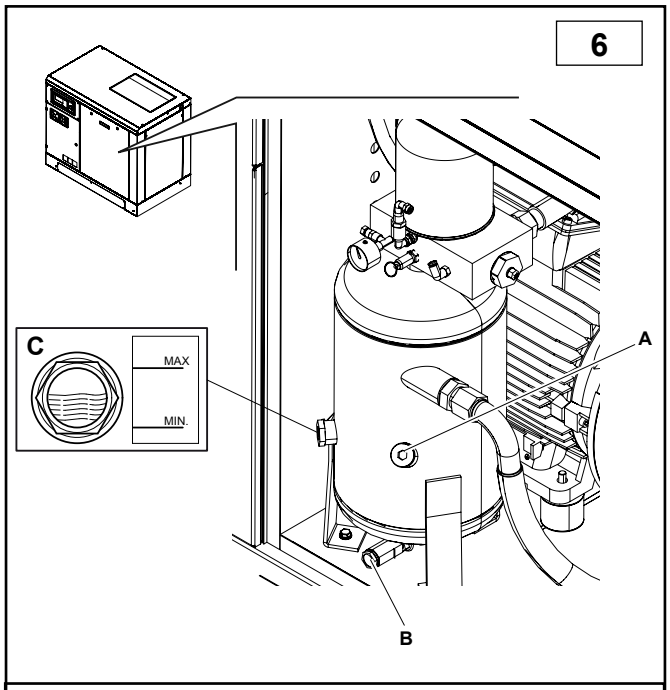

OIL CHECK AND TOP UP IF NECESSARY (Fig. 6)

A compressor off to check the oil level through the indicator C.
If the level is under the minimum, remove the front panel and refill through hole A.
Quantity of oil for refilling from the min to the max level = 2 litres.
Use ONLY oil of the same type (RotEnergy Plus).

CLEANING/REPLACING THE FILTERING ELEMENT (Fig. 7)

Open the front panel, loosen the wing nut (A) and remove the cover B. Extract the filter element (C).
Clean them using compressed air, acting from the inside towards the outside.
Control, against the light, for the presence of splits: in this case replace filters.
The filtering elements and the cover must be assembled carefully, so as not to allow the passage of dust into the compressor unit.
Replace the filtering element C.

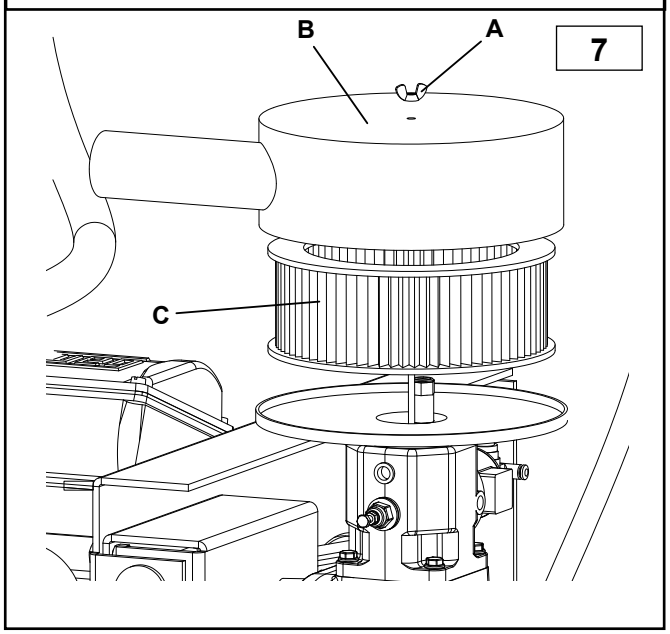

CLEANING THE RADIATOR

It is recommended that in case of over temperature anomalies and however, at least once a year that the radiator is cleaned.
Proceed as follows:
- position a sheet of protective plastic under the radiant pack;

spray (with a washing + detergent gun) from inside towards the outside:
- check that the air flows correctly by means of the radiator.

REPLACING THE OIL FILTER (Fig. 8)

With the compressor stopped, remove the front panel.
At each change replace also the oil filter **E**, unscrew the old filter and replace it. Always apply some oil on the edge of the filter and on the seal before refitting manually the filter.

REPLACING THE SEPARATOR FILTER (Fig. 8)

With the compressor stopped, remove the front panel.
The oil separator filter F cannot be cleaned, but must be replaced.
Unscrew filter manually (or if necessary use an appropriate filter tool) turning it anti-clockwise.
After having slightly greased the oil separator filter seal and O-ring, fit the new filter by turning clockwise.

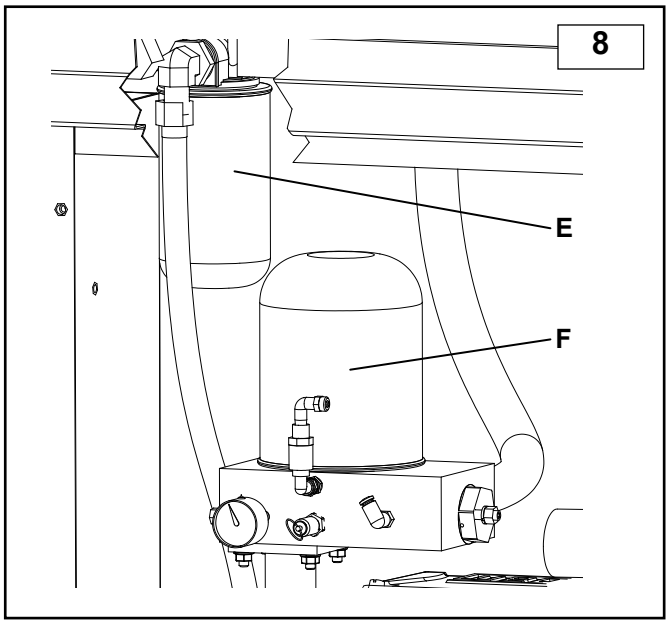

REPLACING THE OIL (Fig.9)

When the compressor is hot - above 70 °C, replace the oil.

- Remove the front panel
- Connect the drain hose provided to cock B located at the base of the separator tank.
- Unscrew the plug from hole **A**, open the cock and allow the oil to drain in to a container until draining is complete.
- Close cock B and withdraw the hose.
- Refill with new oil using hole **A** (quantity for complete refilling: 7 litres) and refit the plug..
- Start up the compressor and allow to function for 5 minutes, and then shut it down. Discharge all of the air and wait 5 minutes before controlling the oil level. Top up get the proper oil level.

THE EXHAUSTED OIL IS HIGHLY POLLUTANT! For its disposal comply with the current laws on environmental protection.

• The first equipment oil is: RotEnergy Plus.

In the case of changing the type of oil, operate only for the complete replacement. NEVER MIX DIFFERENT TYPES OF OIL. In this case, change also the oil filter and the separator filter.

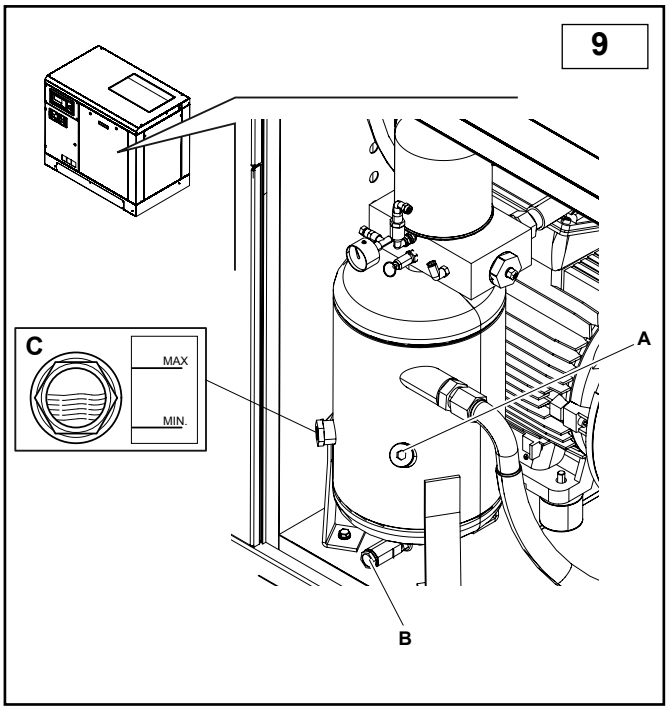

REPLACING THE MINIMUM VALVE (Fig. 11)
Replace the seals highlighted with the letter G.

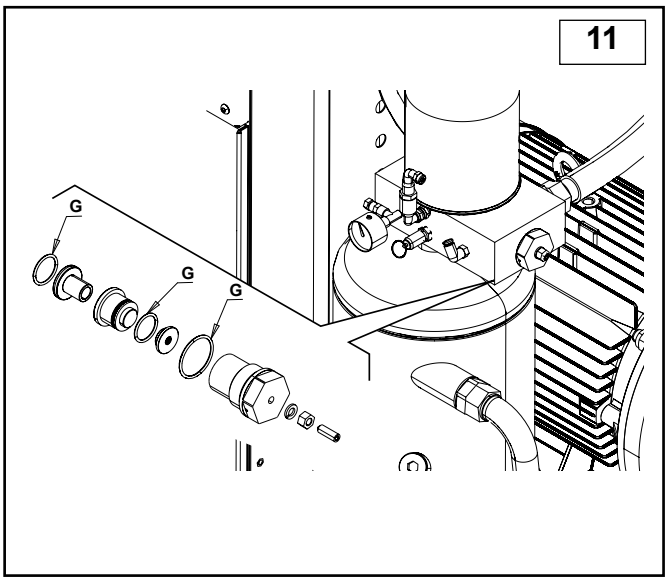

REPLACING THE FLEXIBLE HOSES
It is recommended that they are replaced when changing the oil.
Loosen the hose fittings, replace them and tighten with force the fittings. Continue with the final phases of the oil changing procedure.

CLEAN AIR PREFILTER (Fig. 12)
- Remove the prefilter from its seat.
- Wash it with soapy water solution, dry it completely before restarting the machine.

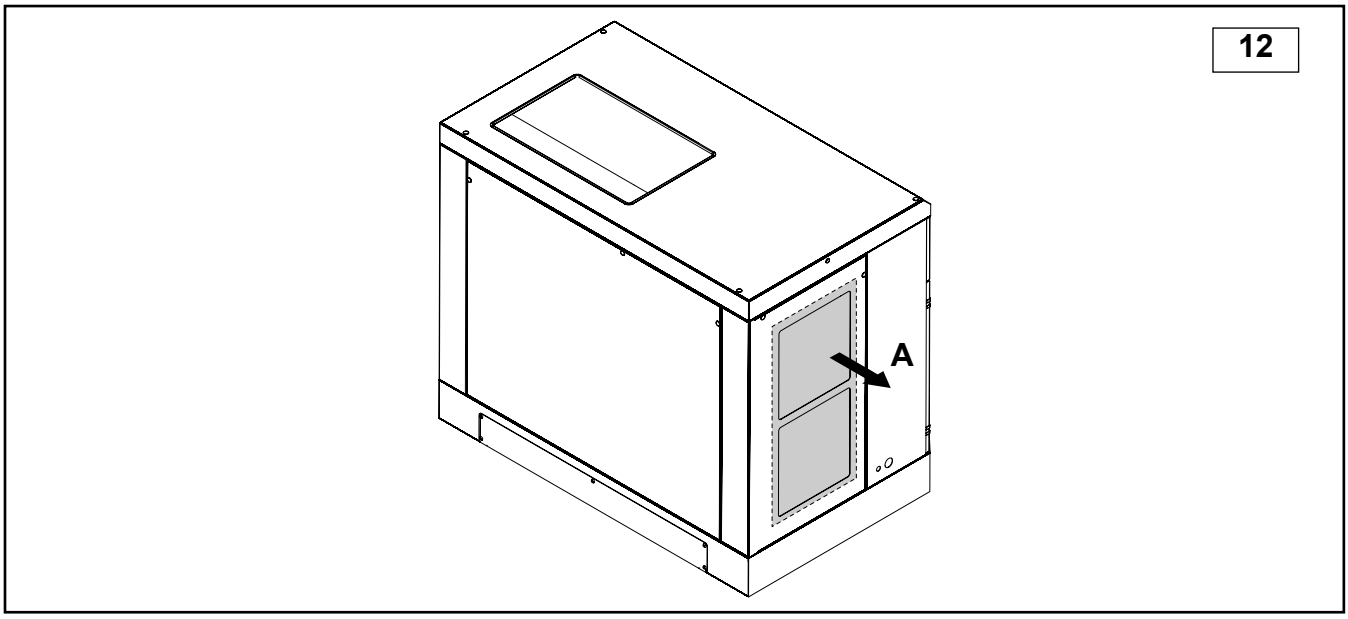

TROUBLESHOOTING

Problem	Cause	Remedy
Motor stopped (thermal relay operation signal)	Voltage too low.	Check voltage, press Reset and then restart.
	Overtemperature.	Check motor absorption and relay setting. In case of regular absorption press Reset and restart.
Oil consumption high	Drainage faulty.	Check oil drain hose and check valve.
	Oil level too high.	Check oil level and drain some, if necessary.
	Oil separator filter broken.	Replace oil separator filter.
	Oil separator filter seal leaking.	Replace oil separator nipple seals.
Intake filter leaks oil	Intake regulator stays open.	Check regulator and solenoid valve.
Safety valve opening	Pressure too high.	Check the pressure setting.
	Intake regulator does not close at the end of the cycle.	Check regulator and solenoid valve.
	Oil separator filter clogged.	Replace oil separator filter.
Sensor for compressor temperature triggered	Room temperature too high	Improve ventilation.
	Radiator clogged.	Clean radiator with solvent.
	Oil level too low.	Top up oil.
	Cooling fan does not start.	Check the electric fan motor.
Compressor performance low	Air filter dirty or clogged.	Clean or replace filter.
Compressor does not compress air while running	Regulator closed. It cannot open because dirty.	Remove intake filter and check for proper manual opening. Remove and clean, if necessary.
	Regulator closed. It cannot open because no command is received.	Check for signal on solenoid valve. Replace damaged part, if any.
Compressor compresses air over max. pressure value	Regulator open. It cannot open because dirty.	Remove and clean regulator.
	Regulator open. It cannot open because no command is received.	Check for signal availability between pressure switch and solenoid valve. Replace damaged part, if any.
Compressor hardly starts	Oil separator filter clogged.	Replace oil separator filter.
	Min. pressure valve does not close perfectly.	Remove the valve, clean and replace seal, if necessary.
	Voltage too low.	Check mains voltage.
	Tube leaking.	Tighten fittings.

WIRING DIAGRAM

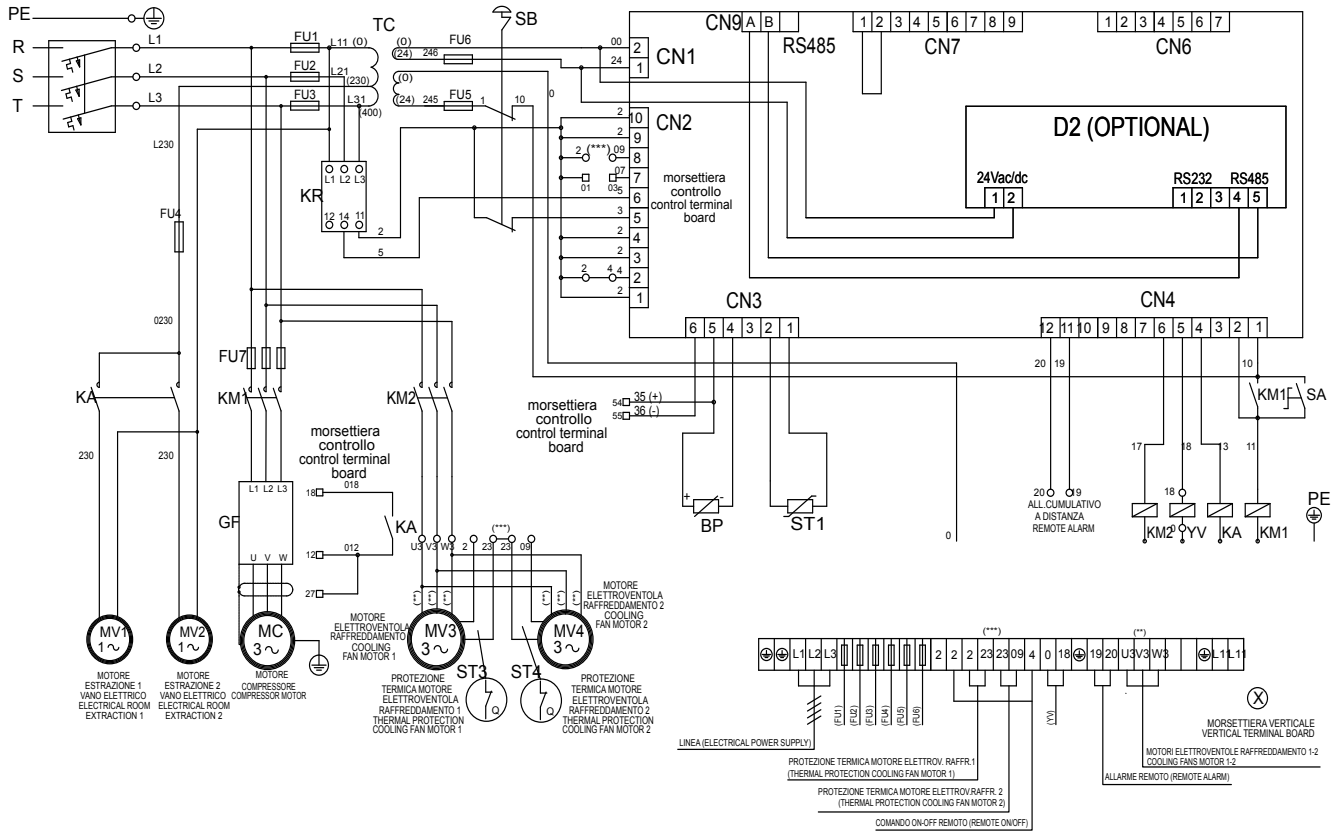

Ref.	Denomination			22
				400 V
TC	Trasformatore (TRASFORMER) Pr.0/230/400 Sec.0/24 0/24 150VA			150 VA
SA	Selettore NA alimentazione inverter (INVERTER FEEDING SELECTOR)			
SB	Pulsante di emergenza (EMERGENCY BUTTON) + n.2 NC 230V 10A			
FU1.FU2.FU3	Fusibili ceramici (CERAMIC FUSES) 2A			
FU4	Fusibile ceramico (CERAMIC FUSE) 1A			
FU5	Fusibile ceramico (CERAMIC FUSE) 6A			
FU6	Fusibile ceramico (CERAMIC FUSE) 1A			
FU7	Base portafusibile tripolare (TRIPOLAR FUSE HOLDER BASE)			50A(22x58)
KM1	Contattore linea alimentazione inverter (INVERTER LINE CONTACTOR) bob.24 V 50/60 Hz			60A AC1
KM2	Contattori elettroventole raffreddamento-essiccatore (COOLING FAN-DRYER CONTACTORS) bob.24V 50/60Hz			3 KW(*)
KA	Rele' ausiliario (AUXILIARY RELE') bob.24 V 50/60 Hz			
GF	Inverter (INVERTER)			22 kW(*)
KR	Dispositivo sequenza fase (PHASE SEQUENCE DEVICE)			
YV	E.valvola compressore (SOLENOID VALVE COMPRESSOR PUMP) 24 VAC 50/60 Hz			
BP	Trasduttore di pressione (PRESSURE TRANSDUCER) 0-16 Bar 4-20 mA			
D1	Controllore elettronico (ELECTRONIC CONTROLLER) 24VAC			
D2	SMS Device 24VAC OPTIONAL			
ST1	Sonda termica mandata vite (TEMPERATURE PROBE COMPR ESSOR PUMP)			
	Sez. cavo motore (MOTOR CABLE CROSS-SECTION AREA)(mmq)			4G 16
	1) Sez.c.to comando=1 mmq - Auxiliary section=1 mmq 2) (*) = 400V AC3 3) (**) = 400 V	Alim : Nero-Blu-Marrone Unire : Giallo-Verde-Bianco PowerSupply:Black-Blue-Brown Join : Yellow-Green-White		